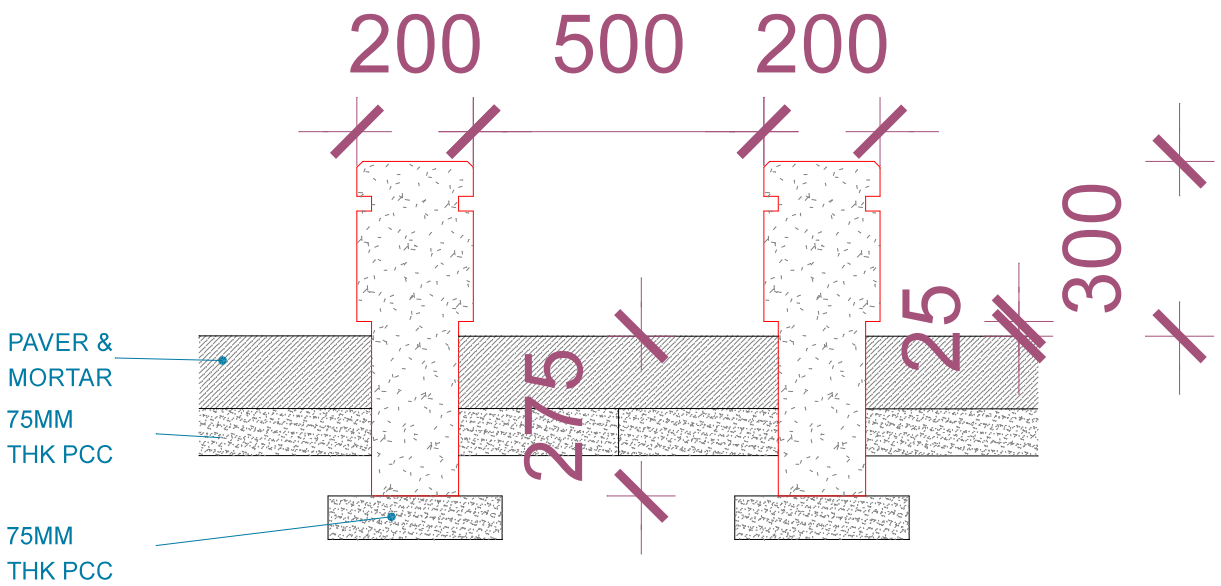


SECTION

REFERENCE IMAGE

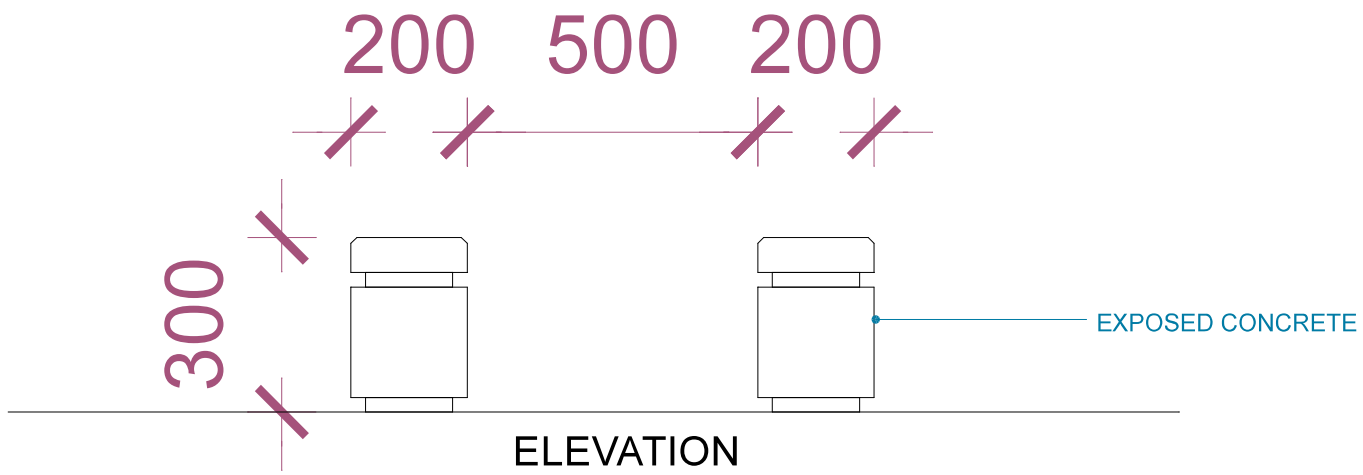


ELEVATION

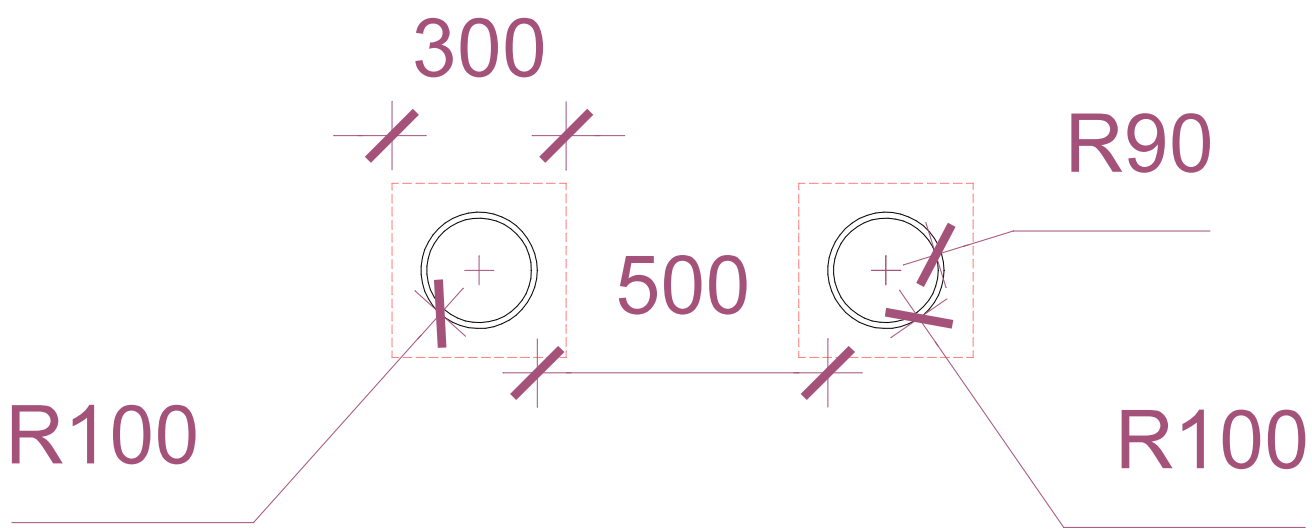


PLAN

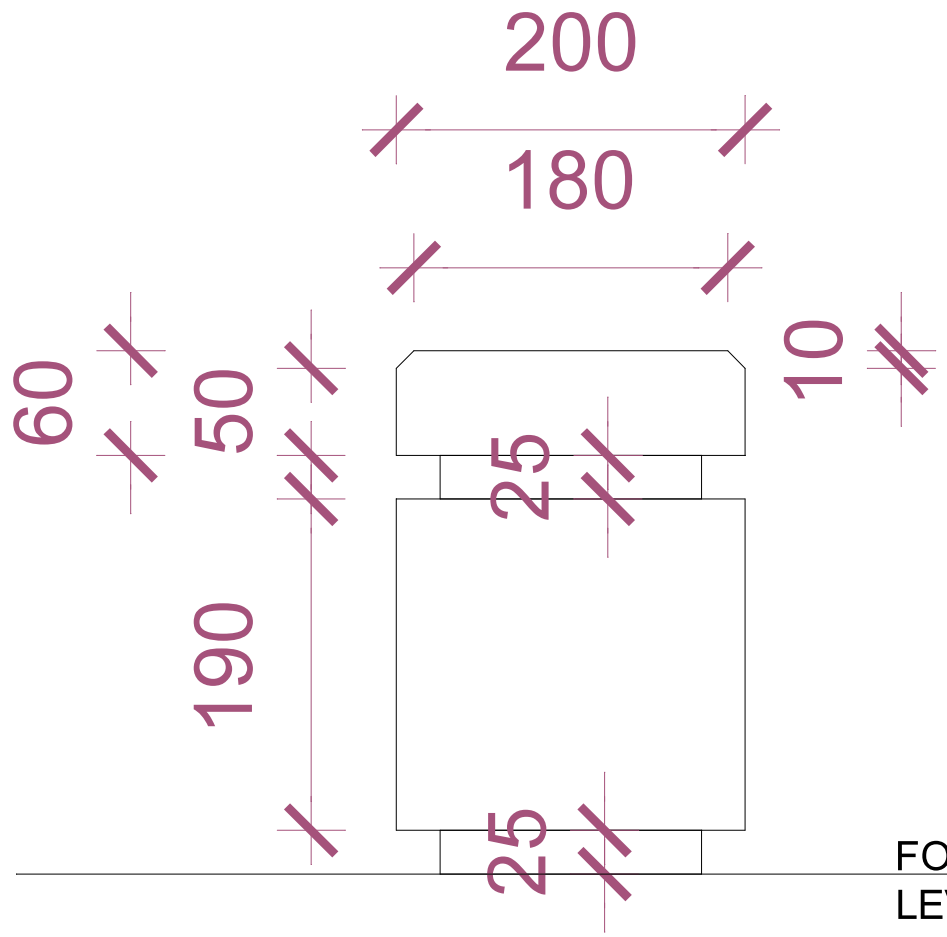


PROJECT NO. 18-08

Project Name:
**Streetscaping of Delhi Roads**

PAREKH ASSOCIATES
2nd Floor - Shree Complex, 1-Azad Society, Ambawadi, Ahmedabad-380015. Telefax: 079 - 26762838 email: abadarch@gmail.com

CLIENT : Public Works Department, Delhi

CONSULTANTS:

Architecture : Parekh Associates — A
Infrastructure : Sthapati Designers & Consultants Pvt. Ltd. — I
Electrical: Jital Jhaveri, Ahmedabad — E
Planning : Design & Planning Counsel, Ahmedabad — U
Landscape: Good Earth Consultants, Ahmedabad — L
Others: — O

Revision History

| No. | Date | Remarks | Prints |
|---|---|---|---|
| R1 | 29.04.2021 | | |

NOTES:

KEY PLAN:

Scale :

Sheet Title: PARKING BOLLARD DETAIL CH 2760-5190

Sheet No.: DT_2015_04_A3.006.R0

N

This drawing is the property of Parekh Associates. It should not be copied, reproduced, lent or used for any other purpose than specified without prior permission of the project architect in writing.

DLT.: Sanchita | CHKD.:JP | DATE : 09.03.2022